KOLMAR
ASANSÖR SANAYİ VE TİCARET A Ş

100.000
lux ı□ık altında
mükemmel
performans

www.kolmar.com.tr

BOY
FOTOSEL

IP 65

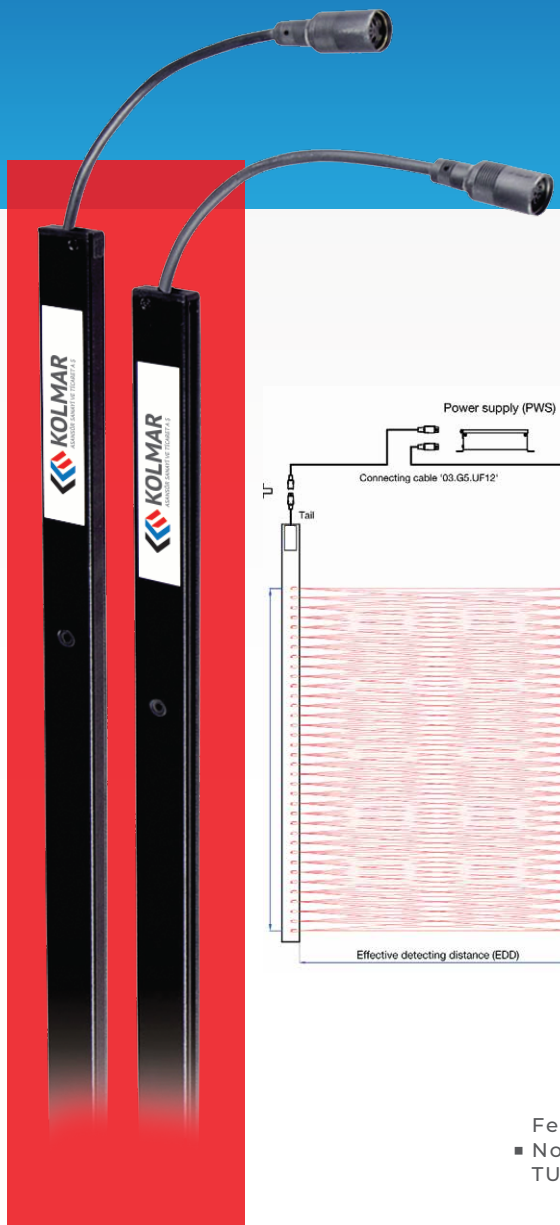

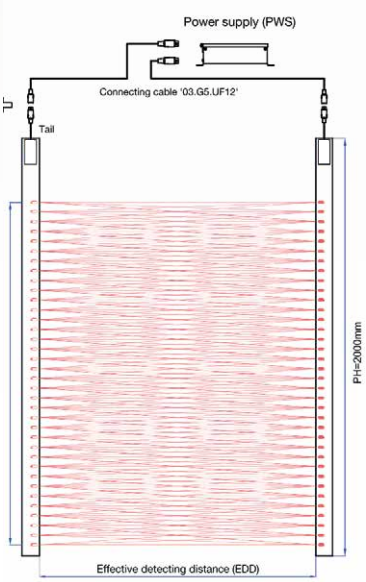

- 36 DIOD,174 IŞIN
- 10 mm PROFİL KALINLIĞI (10x28,8x2000 mm)
- 65 ms TEPKİME SÜRESİ
- -20 C - +65 C ARASI ÇALIŞMA ORTAMI
- IP 65 (suya ve toza karşı koruma)
- 4 W tan az enerji ihtiyacı
- EN81-20,EN81-70,EN12015,EN12016 TAM UYUM
- PROFİL ÜZERİNDEN KOLAY MONTAJ
- 3500 mm ÇALIŞMA ARALIĞI
- BUZZER IPTAL ÖZELLİĞİ

Ferhatpaşa Mah. 44. Sk.
No:55 Ataşehir / İstanbul
TURKEY

Phone +90.216 661 55 67
Fax : +90.216 661 55 65
Mobile +90.530 418 69 70

KMS/T-TE-5023-4

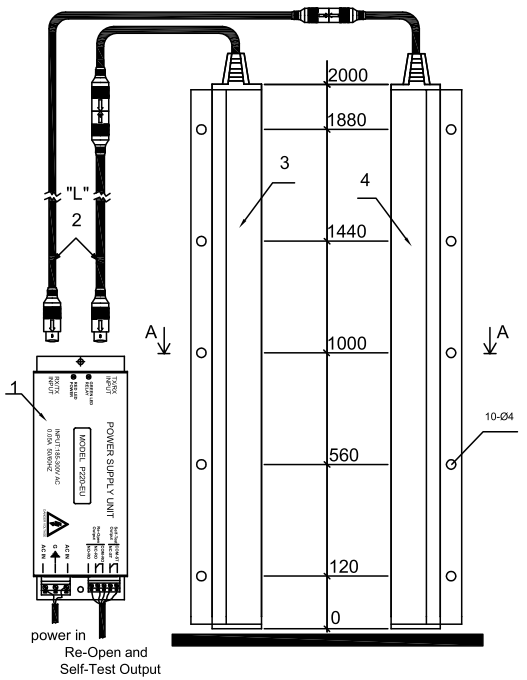

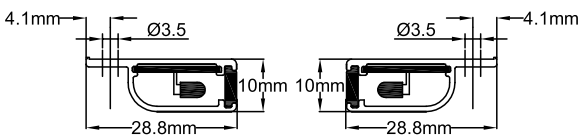

SECTION A-A

Specification of light curtain

Model	KMS-B174/B1	KMS-B194/B1
Number of diodes	36	40
Maximum beams	174 beams	194 beams
Distance between diodes	45.7mm	45.7mm
Response Time (Relay)	＜65ms	＜70ms
Size	10mmX28.8mmX2000mm	
Highest beam	≥1600mm	≥1800mm
Lowest beam	≤20mm	≤20mm
Detecting distance	0~3500mm	0~3500mm
Operating temperature range	-20℃~+65℃	
IP Rating	IP65	
Light immunity	Not less than 100,000LUX	
EMC compliance	Emissions to EN12015, Immunity to EN12016	
Model P220-EU	185-300V AC 0.05A 50/60HZ	
Power rating	≤4W	
Vibration test	Random vibration 10 to 55Hz 1hrs per axis Sinusoidal vibration 30Hz 30mins per axis	
Indicator light function	Indicator lights in TX, RX, and power supply unit can indicate working status	
Self-test mode	Periodic self-testing. In case of power failure or self testing faulty, self test output COM-ST and NC-ST will OPEN.	

System self-testing items description:
1.Single Chip internal RAM, ROM
2.Infrared signal amplifier Circuits
3.Output signals and communication signals
4.Feedbacks of conventional output relay and self-test output relay
In case the system detects above mentioned faulty points, conventional output relay and self-test output relay(NC-ST) will OPEN automatically.

Specification of power supply unit

Model	P220-EU
Size	178mm(L)X67mm(W)X39.5mm(H)
Voltages input	185-300V AC 0.05A 50/60HZ
Power consumption	4VA
Case material	Sleel and Aluminium
Relay contact type	COM,1NO,1NC
Relay contact raling	125V AC 1A or 30V DC 2A
LED indication	Red LED indicates power status GREEN LED indicates working status of conventional output and self-test output. GREEN light will be flashing in case of self-test faulty.
Buzzer switch(optional)	Put ON/OFF buzzer by the switch on side of case
EMC compliance	Comply with EN12015,EN12016

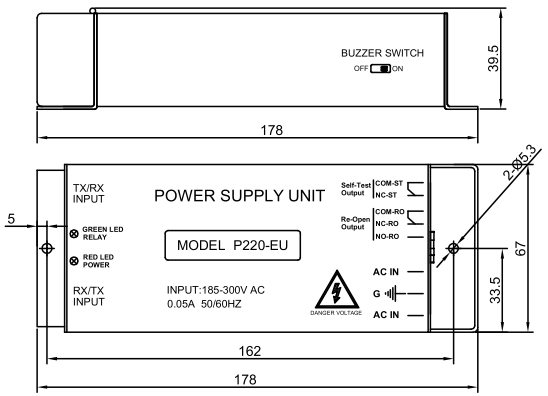

Remarks: Power supply unit includes three groups of outputs:
1. Self test output : COM-ST and NC-ST are applied to self-test output. Output CLOSE in case of power on and self testing normal; Output OPEN in case of power off or self testing faulty, which has nothing to do with whether beams are interrupted or not.
2. Conventional output: COM-RO and NC-RO are applied to beams interruption. Output CLOSE in case of no beams interrupted; Output OPEN in case of power off or beams interrupted. COM-RO and NO-RO are applied to beams interruption. Output OPEN in case of no beams interrupted; Output CLOSE in case of power off or beams interrupted.

No.	DATE	REVISION	BY

No.	DWG No.	Item Name
4		**Receiver edge**
3		**Emitter edge**
2		**CABLE**
1		**POWER SUPPLY**

Drn by	Checked by	Approved by - date	Date

KMS-B174/B1
KMS-B194/B1

KMS/T-TE-5023-4 | Edition A/0 | Sheet NO 01 OF 01

Ferhatpaşa Mah. 44. Sk.
No:55 Ataşehir / İstanbul
TURKEY

Phone +90.216 661 55 67
Fax : +90.216 661 55 65
Mobile+90.530 418 69 70

KOLMAR
ASANSÖR SANAYİ VE TİCARET A.Ş.
www.kolmar.com.tr